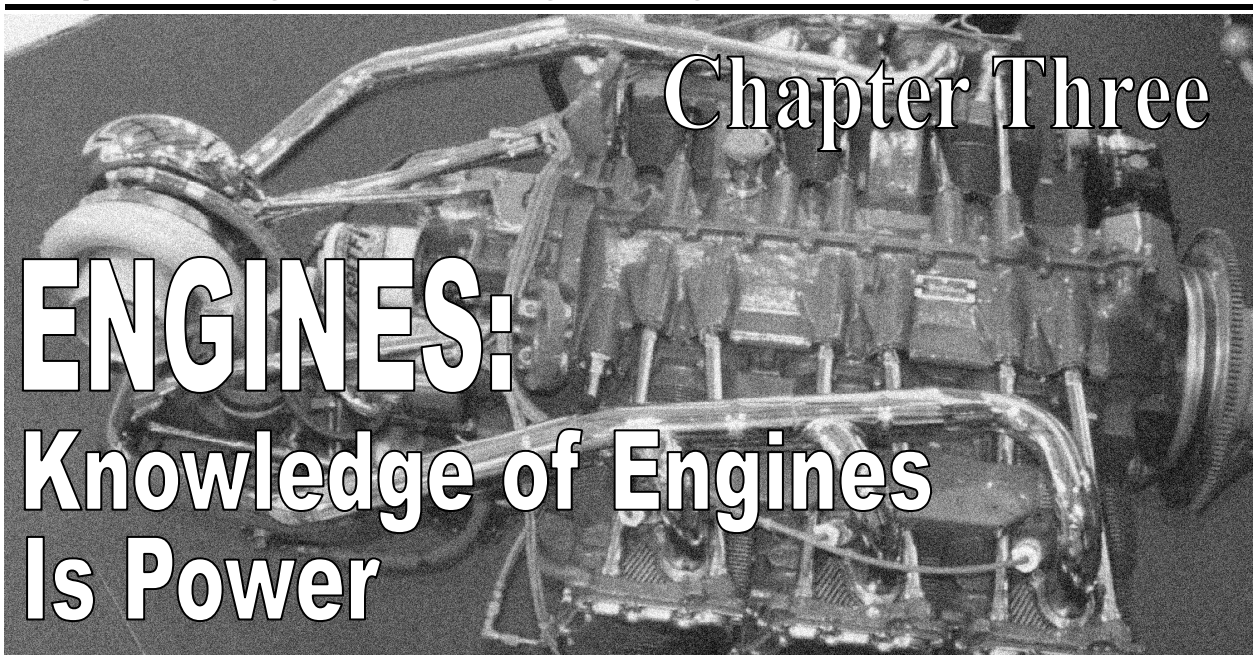


## The Airplane Engine

1. [3-2/1/2] Fill in the blank:
Most general aviation airplane engines are of the _____ opposed variety.

### Four Cycle Engine

**2. [3-2/1/3]** Fill in the blanks:
Horizontally opposed cylinder arrangements pack a lot of engine into a _____ amount of space. Less space used by the engine means less overall _____.

**3. [2/2/2]** Fill in the blanks:
Name the four cycles of an airplane engine:
_____, _____, _____, _____ .

**4. [3-2/2/3]** Fill in the blank:
While the piston is in its downward journey, the _____ valve opens, and a mixture of fuel and air rushes in.

**5. [3-2/2/4]** Fill in the blank:
The _____ cycle occurs when the intake valve closes and the piston rises.

**6. [3-2/2/6]** Fill in the blank:
Just before the cylinder hits the top of its return journey, the _____ _____ fire.

**7. [3-2/2/7]** Fill in the blank:
The burning mixture pushes the piston downward. This is the _____ stroke.

8. [3-3/Figure 3] Label the four strokes:
The Ignition System

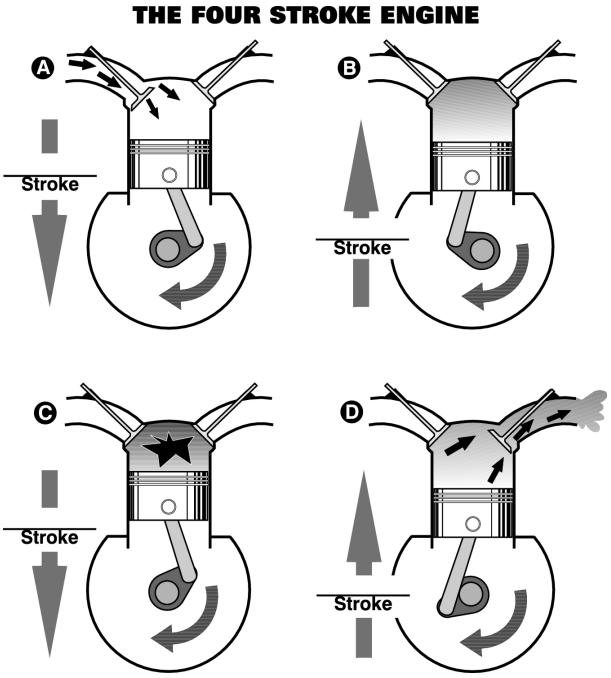

## The Ignition System

### Dual Ignition System

**9. [3-4/1/2]**
One purpose of the dual ignition system on an aircraft engine is to provide for
A. improved engine performance.
B. uniform heat distribution.
C. balanced cylinder head pressure.

### Meet Mister Magneto

**10. [3-4/1/4]** Fill in the blanks:
Magnetos contain spinnable magnets, housed in metal cases. When the internal magnets are spun, they generate electricity for the _____ _____.

**11. [3-4/2/2]** Fill in the blank:
What's particularly interesting about magnetos is that they are self-contained spark generators and require no outside source of electrical energy to work other than the _____ motion of the airplane engine.

### Impulse Coupling

**12. [3-5/1/2]**
What is the purpose of the magneto's impulse coupling?
A. To charge the battery.
B. To provide extra spin energy for the magneto's internal magnets.
C. To move the more massive gear system of large electrical starters.

### Selecting Magnetos

**13. [3-5/1/4]**
Normally, airplanes are operated with the magneto switch in the _____ position.
A. right
B. left
C. both

**14. [3-5/2/1]**
Is it permissible to operate the engine on one magneto?
A. No, never. Not under any circumstances.
B. Only if an instructor is on board and he or she appears calm.
C. Yes. If one magneto goes bad, it's permissible to switch to a single magneto.

**15. [3-5/3/1]** Fill in the blank:
In many cases we're concerned not only with the RPM drop on each magneto, but with the _____ in RPM between each mag drop.

### The P-Lead

**16. [3-5/3/3]**
Selecting the right or left magneto _____ the other mag by grounding it to the airframe.
A. activates
B. deactivates
C. thermonuclearizes

**17. [3-5/3/4]**
The mag is grounded to the airframe via a wire called the _____.
A. P-lead
B. grounding wire
C. wing strut

**18. [3-6/2/2]**
Mechanics (and flight instructors) sometimes recommend doing a P-lead security check just before shutting down. With the engine idling, quickly turn the mag switch from _____ to off, then immediately back to _____ again.

### The Exhaust System

**19. [3-6/3/2]**
Exhaust gases sometimes have an afterlife. They can be put to use spinning a _____ or indirectly heating the _____ or cabin.
A. propeller, carburetor
B. turbocharger, carburetor
C. nosewheel, runway

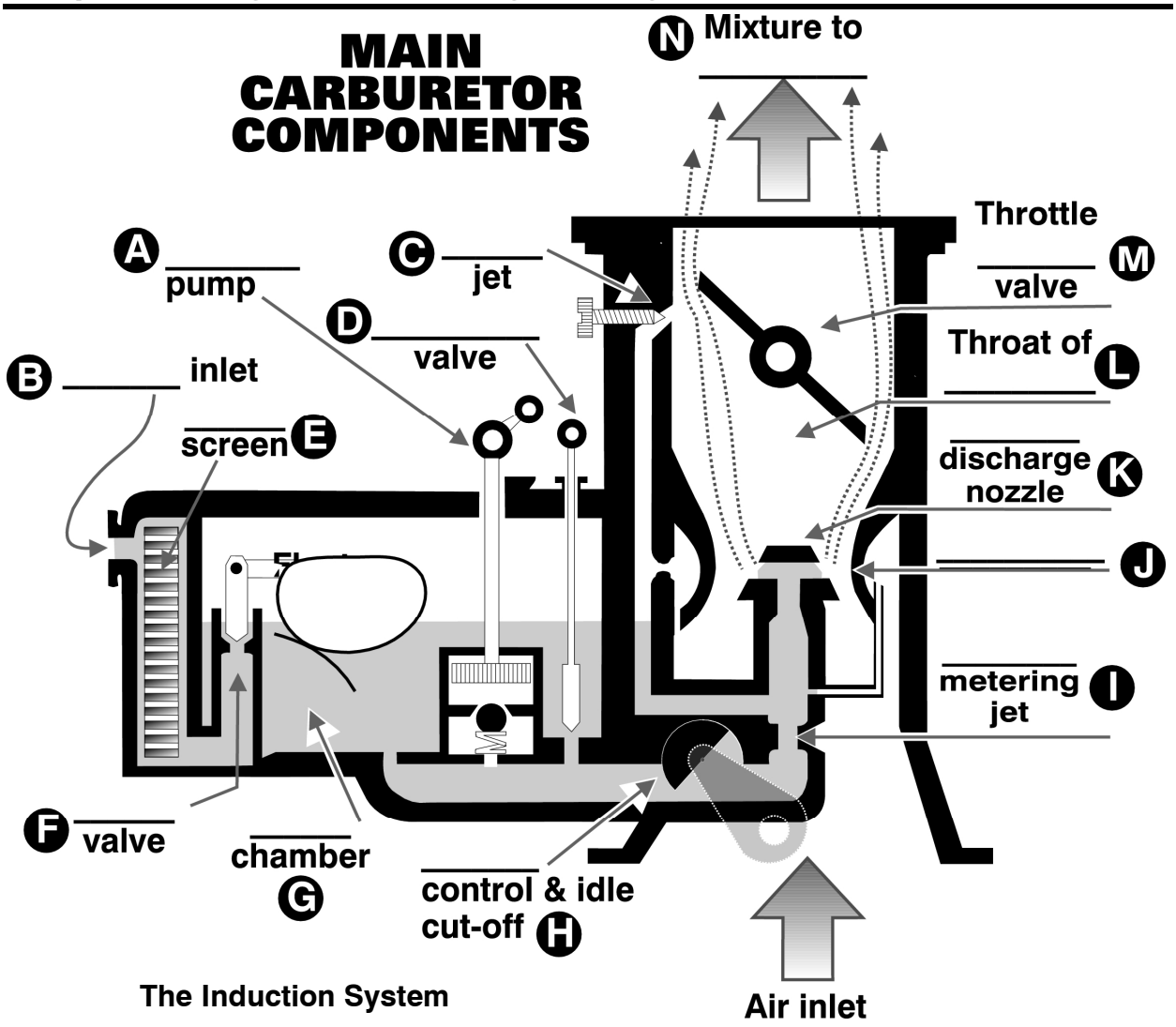


**The Induction System**

**20. [3-7/1/7]**
The _____, _____ and _____ manifold (pipes connected to each cylinder) make up the induction system on carburetor equipped airplanes
A. cowling, carburetor, exhaust
B. air filter, carburetor, exhaust
C. air filter, carburetor, intake

**The Carburetor**

**21. [3-8/1/6]**
Airplane carburetors located underneath the engine are called _____ type carburetors because air and fuel must be drawn upward toward each cylinder.
A. downdraft
B. injection
C. updraft

**22. [3-8/2/2]**
The operating principle of float-type carburetors is based on the
A. automatic metering of air at the venturi as the aircraft gains altitude.
B. difference in air pressure at the venturi throat and the air inlet.
C. increase in air velocity in the throat of a venturi causing an increase in air pressure.

**23. [3-8/Figure 10**] Label the carburetor's components above:

**The Idling System**

**24. [3-9/2/3]** Fill in the blank:
The _____ jet is that portion of the carburetor that allows the engine to run when the throttle is pulled full aft.

### The Accelerator Pump

**25. [3-10/1/3]**
Why doesn't the engine quit or falter when the throttle is opened abruptly?
A. The idling jet keeps a constant flow of fuel into the engine.
B. The accelerator pump supplies a shot of fuel into the throat of the carburetor along with the inrushing air.
C. Gravity supplies the pressure to keep fuel entering the throat of the carburetor when the throttle is opened.

**26. [3-10/1/4]**
Assuming the airplane has an updraft carburetor with an accelerator pump, what happens when the engine isn't running and the throttle is pumped?
A. Fuel will rush up into the engine.
B. Nothing, unless you make the "Vroom, Vroom" sound.
C. Fuel may fall to the bottom of the carburetor and soak the air filter, creating an opportunity for an engine fire.

### Atomization of Fuel

**27. [3-11/1/1]** Fill in the blanks:
Fuel-air ratios of approximately _____ part(s) fuel to _____ parts of air are the most efficient for combustion.

### Your Carburetor, the Ice Maker

**28. [3-11/1/4]**
Temperature drops of as much as _____ within the carburetor's throat are not uncommon.
A. 10°F
B. 550°F
C. 70°F

**29. [3-11/2/2]**
Your carburetor is a fine ice maker. Because of the considerable drop in temperature caused by the atomization and evaporation of fuel, any _____ present can and will freeze.
A. moisture
B. gasoline
C. ice

**30. [3-11/2/4]**
Be prepared for carburetor ice to form at almost any outside air temperature, though it's most likely to occur between outside temperatures of _____.
A. 20°C to 70°C
B. -120°C to 70°F
C. 20°F to 70°F

### Ice: Just Your Type

**31. [3-11/3/2]** Fill in the blanks:
Impact ice occurs when _____ _____ is present and the outside air temperature (OAT) is at or below freezing.

**32. [3-12/1/1]**
When is it possible to have an air filter freeze over while nowhere near a cloud?
A. If the air is moist and temperatures are low, water can accumulate on the air filter's membrane and freeze.
B. Only when the airplane is operated in freezing rain.
C. If the air is between -10°C and -20°C, regardless of the moisture present.

**33. [3-12/1/2]**
Another occasion where impact ice is likely is during _____ (to be discussed further in Chapter 12).
A. thick fog
B. ice-o-cumulus clouds
C. freezing rain

**34. [3-12/1/2]**
If your air filter ever becomes clogged by impact ice, you have a remedy at hand. It's called the _____ control.
A. air traffic
B. throttle
C. carburetor heat

**35. [3-12/1/3]**
Fuel ice forms _____ of the main discharge nozzle.
A. in the slipstream
B. upstream
C. downstream

**36. [3-12/2/2]**
Which condition is most favorable for the development of carburetor icing?
A. Any temperature below freezing and a relative humidity of less than 50 percent.
B. Temperature between 32°F and 50°F and low humidity.
C. Temperature between 20°F and 70°F and high humidity.

**37. [3-12/2/2]**
Fuel ice can occur at outside air temperatures as high as _____ and at humidities as low as _____.
A. 85°F, 50%
B. 10°F, 30%
C. 50°F, 85%

**38. [3-12/2/3]**
Throttle ice forms on the _____ side of the throttle valve. It is more likely to occur when the throttle is in a _____ position.
A. rear, partially closed
B. front, open
C. rear, fully open

**39. [3-12/Figure 17]** Label the two types of ice:

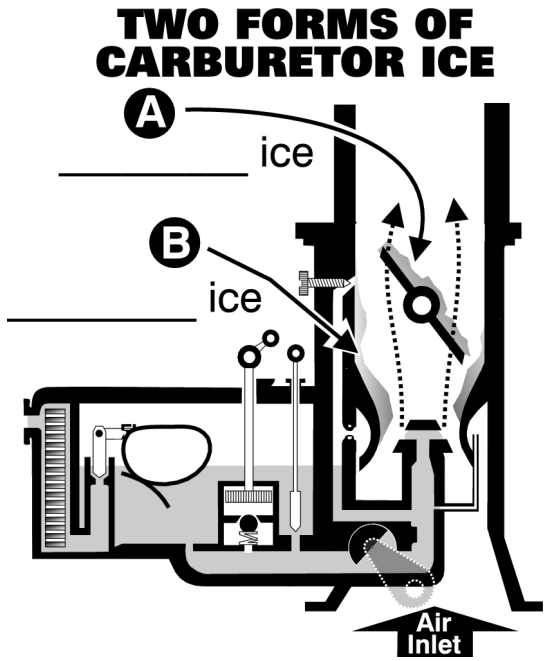


**The Ice Eater: The Carburetor Heater**

**40. [3-12/3/3]**
Pulling the carburetor heat lever allows heated air to enter the carburetor, raising the air temperature within its throat as much as _____.
A. 30°F
B. 90°C
C. 90°F

**Carb Ice Symptoms**

**41. [3-13/1/2]**
If an aircraft is equipped with a fixed pitch propeller and a float-type carburetor, the first indication of carburetor ice would most likely be
A. a drop in oil temperature and cylinder head temperature.
B. engine roughness.
C. loss of RPM.

**42. [3-13/2/3]**
The presence of carburetor ice in an aircraft equipped with a fixed pitch propeller can be verified by applying carburetor heat and noting
A. an increase in RPM and then a gradual decrease in RPM.
B. a further decrease in RPM and then a constant RPM indication.
C. a further decrease in RPM and then a gradual increase in RPM.

**43. [3-13/Figure 20]**
Circle the reference on the next page (A, B, C or D) that best represents the sequence of identifying carb ice, applying carb heat, having the ice dissipate and then removing carb heat.

**44. [3-14/2/2]**
Generally speaking, the use of carburetor heat tends to
A. decrease engine performance.
B. increase engine performance.
C. have no effect on engine performance.

**45. [3-14/2/2]**
Applying carburetor heat will
A. result in more air going through the carburetor.
B. enrich the fuel/air mixture.
C. not affect the fuel/air mixture.

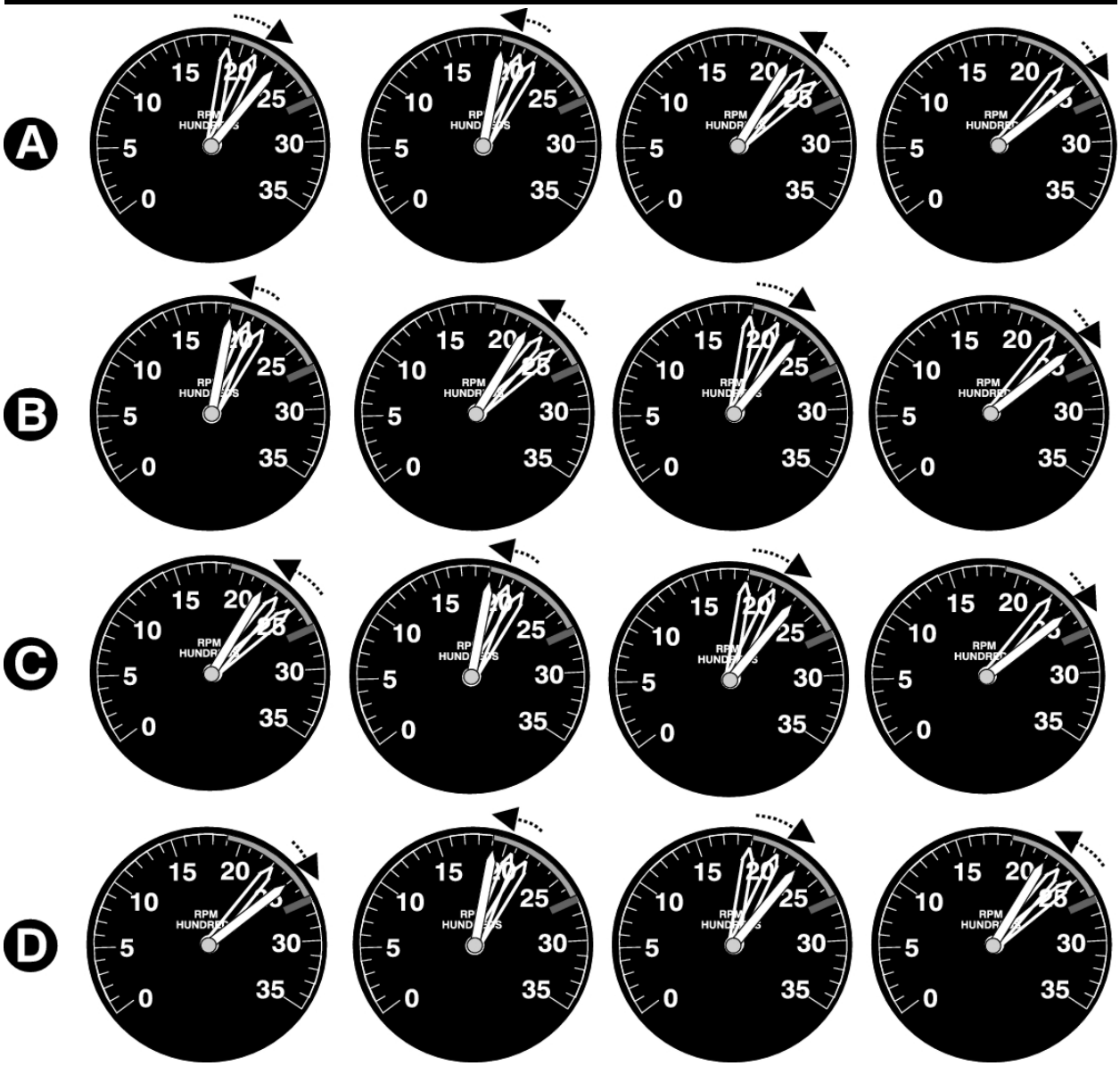


**46. [3-14/2/2]**
What change occurs in the fuel/air mixture when carburetor heat is applied?
A. A decrease in RPM results from the leaner mixture.
B. The fuel/air mixture becomes richer.
C. The fuel/air mixture becomes leaner.

**Apply Carb Heat as a Precautionary Measure**

**47. [3-14/3/1]**
A carburetor air temperature gauge allows you to identify the _____ temperature range where carburetor ice is most likely to occur.
A. critical
B. noncritical
C. humidity

**Carburetor Icing Potential in Different Engines**

**48. [3-C15/1/1]**
All engines _____ have the same carburetor icing potential.
A. do
B. do not
C. almost always

## Fuel: Going With the Flow

### The Mixture Control

**49. [3-15/2/3]**
Pulling out (toward you) on the mixture control _____the amount of fuel for a given amount of air entering the engine.
A. doesn't change
B. increases
C. decreases

### The Fuel/Air Mixture

**50. [3-15/3/2]**
With an increase in altitude the air becomes thinner and doesn't ---_____ as much for a given volume.
A. weigh
B. count
C. vary

**51. [3-15/3/2]**
The basic purpose of adjusting the fuel/air mixture at altitude is to
A. decrease the amount of fuel in the mixture in order to compensate for increased air density.
B. decrease the fuel flow in order to compensate for decreased air density.
C. increase the amount of fuel in the mixture to compensate for the decrease in pressure and density of the air.

### When to Lean

**52. [3-16/2/2]**
Most engine manufacturers recommend leaning the mixture whenever you're operating at or below _____ of the engine's maximum power output (check your POH to be sure).
A. 25%
B. 90%
C. 75%

**53. [3-16/3/1]**
How might you estimate that you're operating at power levels greater than 75% in a non-turbocharged engine?
A. When the throttle extends no more than 1/4 of its maximum travel from its full-in position.
B. If the airplane is operating with full throttle at less than 5,000 feet MSL.
C. If the RPM is less than 2,500, then you're operating at less than 75% power.

**54. [3-17/1/1]**
Remember, failure to lean appropriately means you'll use up _____ portion of fuel unnecessarily.
A. an extra
B. a lesser
C. more than an equal

### How to Lean

**55. [3-17/3/2]**
Airplanes with fixed pitch propellers (propellers having one pitch that can't be changed in flight) and float-type carburetors can be leaned by reference to the _____.
A. ailerons
B. tachometer
C. leaner

**56. [3-17/3/2]**
While leaning with reference to the tachometer, the RPM peaks. This means that you are at the fuel-air ratio that produces maximum _____ for a given air density and throttle setting.
A. torque
B. leaning
C. power

### Too Rich and Too Lean

**57. [3-18/2/2]**
A mixture that is too rich causes engine _____.
A. roughness
B. purring
C. heat

**58. [3-18/2/3]**
A fouled spark plug in flight can sometimes be detected by _____.
A. an increase in the pilot's heart beat
B. an increase in EGT
C. a decrease in EGT

**59. [3-18/2/4]**
An excessively rich mixture contributes to _____, _____, _____ and _____.
A. a rough running engine, high fuel consumption, less range, smaller fuel reserves
B. a smooth running engine, low fuel consumption, more range, larger fuel reserves
C. a barely running engine, high alcohol consumption, less radar range, smaller food reserves

**60. [3-18/2/4]**
During the run-up at a high elevation airport, a pilot notes a slight engine roughness that is not affected by the magneto check but grows worse during the carburetor heat check. Under these circumstances, what would be the most logical initial action?
A. Check the results obtained with a leaner setting of the mixture.
B. Taxi back to the flight line for a maintenance check.
C. Reduce manifold pressure to control detonation.

**61. [3-18/3/2]**
The biggest danger with an excessively lean mixture is that it _____.
A. doesn't burn
B. burns hot
C. burns cool

**62. [3-18/3/2]**
What is one procedure to aid in cooling an engine that is overheating?
A. Enrichen the fuel mixture.
B. Increase the RPM.
C. Reduce the airspeed.

**63. [3-18/3/3]**
High cylinder head temperatures also lead to something known as _____.
A. pre-ignition
B. detonation
C. combustion

### Leaning & High Altitude Takeoffs for Non-turbocharged Airplanes

**64. [3-16-C18]**
While cruising at 9,500 feet MSL, the fuel/air mixture is properly adjusted. What will occur if a descent to 4,500 feet MSL is made without readjusting the mixture?
A. The fuel/air mixture may become excessively lean.
B. There will be more fuel in the cylinders than is needed for normal combustion, and the excess fuel will absorb heat and cool the engine.
C. The excessively rich mixture will create higher cylinder head temperatures and may cause detonation.

**65. [3-19/Figure 30/See EGT Gauge Setting... sidebar]**
For best power (most useable power per unit of air), enrich the mixture until the temperature _____ . (Check your POH to ensure the proper procedure for your aircraft.)
A. increases 50°F from peak EGT
B. drops 50°F from peak EGT
C. decreases 125°F from peak EGT

## The Fuel System

### Components

**66. [3-C20/3/2]**
Water is the most frequent contaminant found in fuel. Water, weighing approximately _____ pounds per gallon, _____ than fuel, which weighs approximately _____ pounds per gallon.
A. 8, is heavier, 6
B. 6, is lighter, 8
C. 8, tastes better, 10

**67. [3-C21/1/1]**
If it's present, water rests on the _____ of fuel tanks, where it's often the first thing to go to the engine.
A. top
B. bottom
C. outside

**68. [3-20/Figure 32]** Label the fuel system components shown on the next page:

**69. [3-C21/2/2]**
Filling the fuel tanks after the last flight of the day is considered a good operating procedure because this will
A. force any existing water to the top of the tank away from the fuel lines to the engine.
B. prevent expansion of the fuel by eliminating airspace in the tanks.
C. prevent moisture condensation by eliminating airspace in the tanks.

**70. [3-C21/2/3]**
Fuel tanks have sump drains found at the _____ part of the tank. The sumps should be drained after every _____.
A. lowest, refueling
B. highest, refueling
C. lowest, annual inspection

**TYPICAL GRAVITY FED (HIGH WING) FUEL SYSTEM**

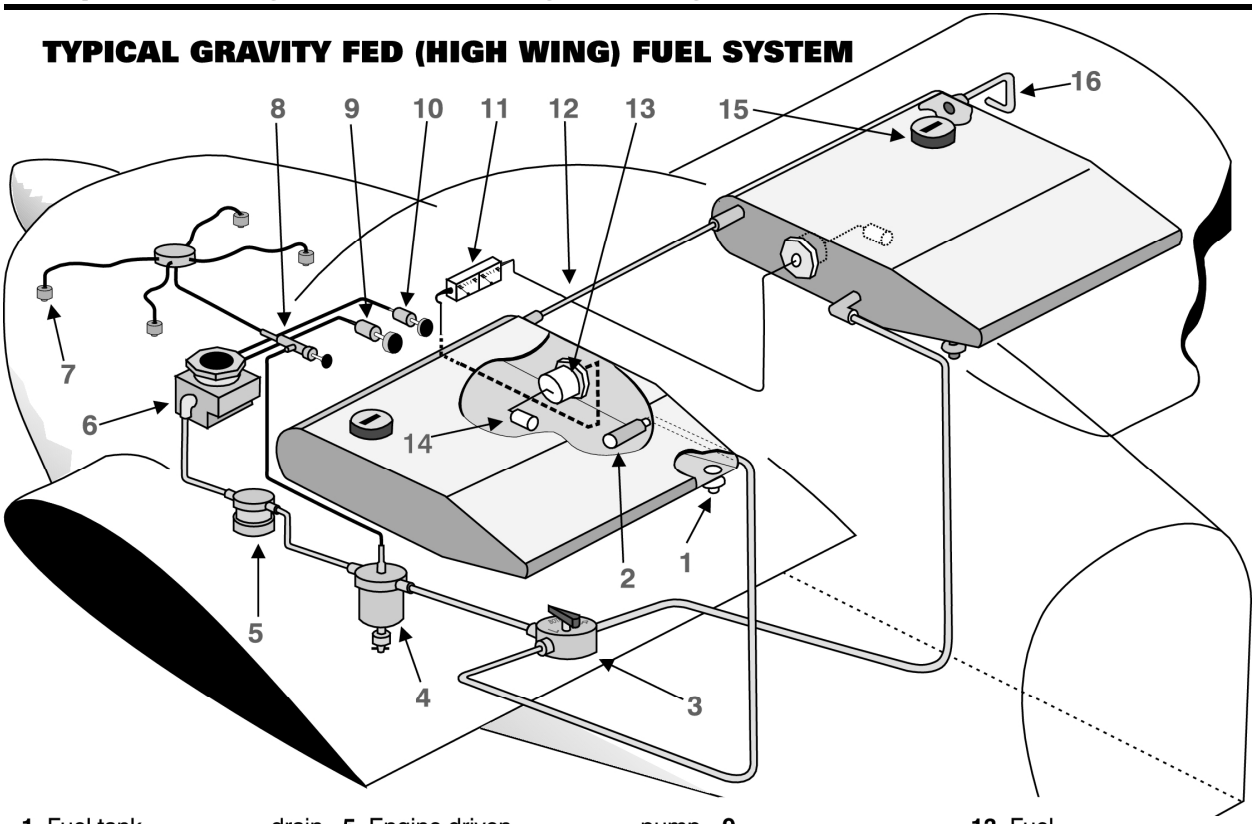


**1.** Fuel tank _____ drain
**2.** Fuel line _____
**3.** Fuel _____ valve
**4.** Fuel _____ & valve
**5.** Engine driven _____ pump
**6.** _____
**7.** Fuel _____ lines
**8.** _____
**9.** _____
**10.** _____ control
**11.** Fuel _____
**12.** Tank _____
**13.** Fuel _____
**14.** Rheostat _____
**15.** Fuel _____
**16.** Fuel tank _____

**71. [3-21/2/3]**
To properly purge water from the fuel system of an aircraft equipped with fuel tank sumps and a fuel strainer quick drain, it is necessary to drain fuel from the
A) fuel strainer drain.
B) lowest point in the fuel system.
C) fuel strainer drain and the fuel tank sumps.

### Fuel Colors

**72. [3-22/1/2]**
What type fuel can be substituted for an aircraft if the recommended octane is not available?
A. The next higher octane aviation gas.
B. The next lower octane aviation gas.
C. Unleaded automotive gas of the same octane rating.

### Fuel Vents

**73. [3-22/2/1]** Fill in the blank:
As the fuel pump sucks fuel from the tank, air must replace the departing fuel or a _____ forms.

### Auxiliary Fuel Pumps

**74. [3-22/3/2]**
Boost pumps are often used during _____ to pressurize the fuel system. This helps purge air trapped within the fuel lines. After the engine starts, the electric boost pump is _____ to see if the _____ pump is operational and is pressurizing the system.
A. engine failures, kept on, vacuum
B. engine start, located, mechanical
C. engine start, turned off, mechanical

**75. [3-23/1/2]**
On aircraft equipped with fuel pumps, the practice of running a fuel tank dry before switching tanks is considered unwise because
A. the engine-driven fuel pump or electric fuel boost pump may draw air into the fuel system and cause vapor lock.
B. the engine-driven fuel pump is lubricated by fuel and operating on a dry tank may cause pump failure.
C. any foreign matter in the tank will be pumped into the fuel system.

### Prime Time

**76. [3-23/2/2]**
The primer usually squirts fuel in the _____ portions of the induction system, _____ the carburetor completely.
A. upper, bypassing
B. lower, bypassing
C. most forward, involving

### Fuel Gauges

**77. [3-24/1/1]**
The regulations require fuel gauges to be accurate in only two conditions: when the tank is _____ and when it's _____.
A. 1/4 full, empty (no useable fuel on board)
B. half-full, empty (no useable fuel on board)
C. full, empty (no useable fuel on board)

### How Much Is Enough?

**78. [3-24/3/1]**
Remember Rod Machado's fuel axiom No. 13: If you smell fuel on takeoff, go back and land. You probably left the cap off your _____.
A. tractor
B. toothpaste
C. tank

## The Oil System

**79. [3-25/See Sudden Loss of Oil sidebar]**
If an airplane's oil cap is left off or comes loose during flight, oil may be _____ the engine.
A. expelled from
B. consumed by
C. overheated by

**80. [3-25/1/2]**
For internal cooling, reciprocating aircraft engines are especially dependent on
A. a properly functioning thermostat.
B. air flowing over the exhaust manifold.
C. the circulation of lubricating oil.

### Malfunctions in the Oil System

**81. [3-25/2/3]**
What should be the first action after starting an aircraft engine?
A. Adjust for proper RPM and check for desired indications on the engine gauges.
B. Place the magneto or ignition switch momentarily in the OFF position to check for proper grounding.
C. Test each brake and the parking brake.

**82. [3-26/1/1]**
Engines are generally preheated in extreme cold. Lycoming, for example, recommends the engine be preheated at temperatures below _____ to prevent engine damage during startup. Continental says _____.
A. 10°F, 20°F
B. 30°F, 50°F
C. -20°F, -60°F

**83. [3-26/1/2]**
An abnormally high engine oil temperature indication may be caused by
A. the oil level being too low.
B. operating with a slightly higher viscosity oil.
C. operating with an excessively rich mixture.

**84. [3-26/1/2]**
Excessively high engine temperatures will
A. cause damage to heat-conducting hoses and warping of the cylinder cooling fins.
B. cause loss of power, excessive oil consumption, and possible permanent internal engine damage.
C. not affect an aircraft engine.

**85. [3-26/1/2]**
If the engine oil temperature and cylinder head temperature gauges have exceeded their normal operating range, the pilot may have been operating with
A. the mixture set too rich.
B. higher-than-normal oil pressure.
C. too much power and with the mixture set too lean.

**86. [3-26/1/2]**
What action can a pilot take to aid in cooling an engine that is overheating during a climb?
A. Reduce rate of climb and increase airspeed.
B. Reduce climb speed and increase RPM.
C. Increase climb speed and increase RPM.

**87. [3-26/1/3]**
Inside most airplane engines is something known as an _____. This valve provides an alternate path for the flow of oil if the pressure within the system becomes dangerously _____.
A. oil pressure temperature value, low
B. oil pressure relief valve, high
C. oil pressure relief valve, low

## The Engine Cooling System

**88. [3-26/2/2]**
Keep in mind that engine cooling is least effective at_____ power settings and _____ airspeeds, where a limited amount of air enters the engine cowling.
A. low, high
B. high, low
C. medium, medium

## Detonation and Preignition

### Detonation

**89. [3-27/2/1]**
Detonation occurs in a reciprocating aircraft engine when
A. the spark plugs are fouled or shorted out or the wiring is defective.
B. hot spots in the combustion chamber ignite the fuel/air mixture in advance of normal ignition.
C. the unburned charge in the cylinders explodes instead of burning normally.

**90. [3-27/3/4]**
Which would most likely cause the cylinder head temperature and engine oil temperature gauges to exceed their normal operating ranges?
A. Using fuel that has a lower-than-specified fuel rating.
B. Using fuel that has a higher-than-specified fuel rating.
C. Operating with higher-than-normal oil pressure.

**91. [3-27/3/4]**
If the grade of fuel used in an aircraft engine is lower than specified for the engine, it will most likely cause
A. a mixture of fuel and air that is not uniform in all cylinders.
B. lower cylinder head temperatures.
C. detonation.

**92. [3-28/1/3]**
If a pilot suspects that an airplane engine with a fixed-pitch propeller is detonating during climbout after takeoff, the initial corrective action to take would be to
A. lean the mixture.
B. lower the nose slightly to increase airspeed.
C. apply carburetor heat.

### Preignition

**93.[3-28/1/5]**
The uncontrolled firing of the fuel/air charge in advance of normal spark ignition is known as
A. combustion.
B. preignition.
C. detonation.

**94120. [3-28/1/5]**
Preignition causes peak pressures within the cylinder to occur before the beginning of the _____ cycle.
A. power
B. intake
C. compression

### Fuel Injection Systems

**95. [3-28/2/2]**
Fuel injection is a process in which fuel is directly _____ and _____ to each cylinder without the use of a carburetor.
A. metered, distributed
B. atomized, sent
C. mixed with air, sent

**96. [C3-29/1/2]**
The FCU (fuel control unit) regulates both the volume of _____ entering the engine and the quantity of _____ delivered to the FMU (fuel manifold unit).
A. fuel, spark
B. air, fuel
C. fuel vapor, air

**97123. [3-29/1/3]**
You can't get carburetor ice in a fuel injection system for one very important reason: there is _____.
A. no fuel in this system
B. no water in this system
C. no carburetor associated with this system

**98. [3-29/1/3]**
With regard to carburetor ice, float-type carburetor systems in comparison to fuel injection systems are generally considered to be
A. more susceptible to icing.
B. equally susceptible to icing.
C. susceptible to icing only when visible moisture is present.

**99. [3-29/2/3]**
A major advantage of fuel injection is
A. improved control of fuel-air ratio.
B. less uniform delivery of the fuel-air mixture to each cylinder.
C. a greater chance of vaporization ice (fuel ice).

**100. [3-29/2/8]**
A major disadvantage of fuel injection is
A. increased engine efficiency.
B. contamination of dirt and water can more easily affect fuel injected engines due to the small orifices of injector nozzles.
C. instant acceleration of engine without tendency to hesitate.

**Postflight Briefing 3-1: The Rotax 912 Engine**

101. [3-30/1/2]
True or False A Rotax 912ULS is a geared engine in which the crankshaft turns faster than the propeller.

102. [3-31/2/1]
The purpose of the slipper clutch in the Rotax engine is to
A. keep the gear box from slipping
B. protect the crankshaft in the event of a sudden stoppage such as a prop strike
C. keep the propeller hub from slipping off of the engine

103. [3-32/1/1]
How many carburetors are on a Rotax 912ULS?
A. 1
B. 2
C. 3

104. [3-33/2/1]
The best type of fuel to use in a Roatx engine is
A. 100LL avgas
B. jet A
C. auto fuel of the appropriate octane

105 [3-35/2/3]
What type of coolant should be used in a Rotax engine?
A. 50/50 antifreeze and water
B. waterless coolant
C. either 50/50 or waterless, but do not mix the two

106. [3-36/1/1]
The Rotax 912ULS utilizes a ____ sump for the oil system.
A. Wet
B. Damp
C. Dry

107. [3-39/1/2]
To ensure that the oil is passing through the filter rather than the bi-pass valve, you should have a miumum engine temperature of ____ before using takeoff power.

A. 120°F (50°C)
B. 180°F (82°C)
C. 266°F (130°C)

108. [3-40/2/2]
The Rotax ignition system is powered by two
A. magnetos
B. solid state, breakerless discharge modules with charging coils
C. alternators

109. [3-42/1/2]
You should try not to exceed ___ amps when using the Rotax internal generating unit.
A. 14
B. 20
C. 40

1. horizontally
2. small, drag
3. intake, compression, power, exhaust
4. intake
5. compression
6. spark plugs
7. power
8. A/intake
   B/compression
   C/power,
   D/exhaust
9. A
10. spark plug
11. turning
12. B
13. C
14. C
15. difference
16. B
17. A
18. both, both
19. B
20. C
21. C
22. B
23. A/accelerator, B/fuel
    C/idling, D/economizer
    E/fuel, F/needle, G/float
    H/mixture, I/main, J/venturi
    K/main, L/carburetor
    M/butterfly, N/cylinder
24. idling
25. B
26. C
27. one, 13
28. C
29. A
30. C
31. visible moisture
32. A
33. C
34. C
35. C
36. C
37. A
38. A
39. A/throttle, B/fuel
40. C
41. C
42. C
43. C
44. A
45. B
46. B
47. A
48. B
49. C
50. A
51. B
52. C
53. B
54. A
55. B
56. C
57. A
58. B
59. A
60. A
61. B
62. A
63. B
64. A
65. C
66. A
67. B
68. 1/sump, 2/strainer
    3/selector, 4/strainer
    5/fuel, 6/carburetor
    7/primer, 8/primer
    9/throttle, 10/mixture
    11/gauges, 12/interconnect
    13/rheostat, 14/float
    15/cap, 16/vent
69. C
70. A
71. C
71. C
72. A
73. vacuum
74. C
75. A
76. A
77. C
78. C
79. A
80. C
81. A
82. A
83. A
84. B
85. C
86. A
87. B
88. A
89. C

90. A
91. C
92. B
93. B
94. A
95. A
96. B
97. C
98. A
99. A
100. B
101. True
102. B
103. B
104. C
105. C
106. C
107. A
108. B
109. A