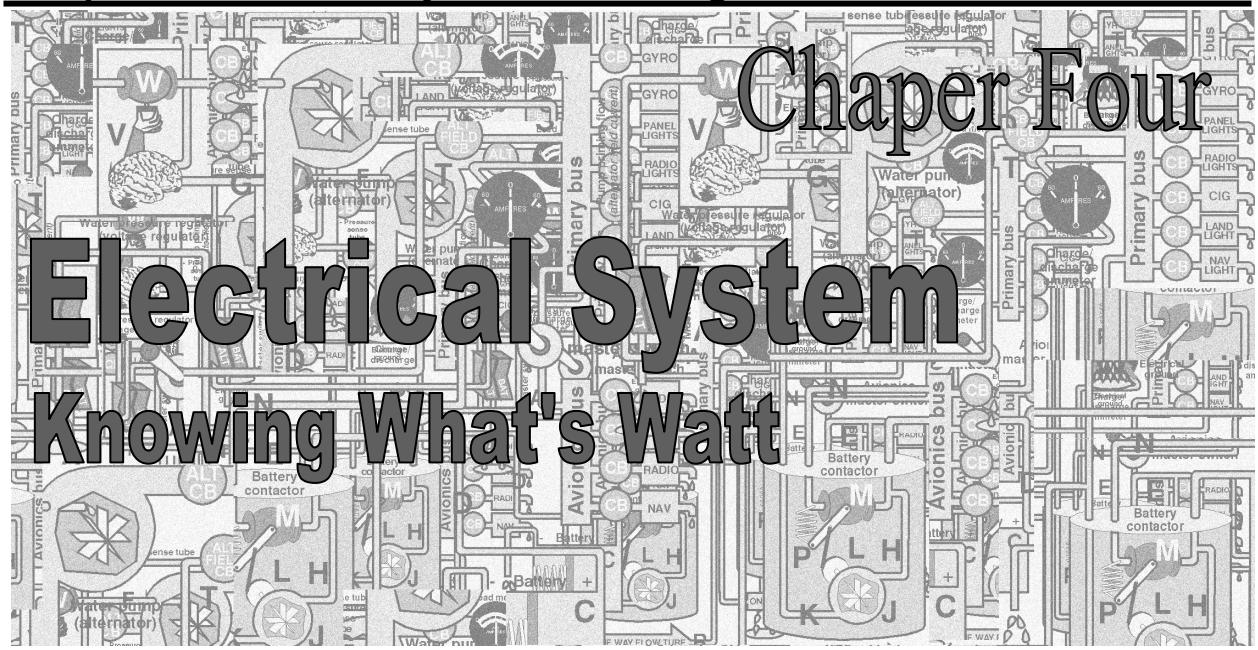

Electricity and Water **The Water Pump**

1. [4-2/1/1]
Electrons flow from the _____ to the _____ side of a battery.
A. negative, positive
B. positive, negative
C. positive, neutral

2. [4-2/1/2]
Electricity involves many terms that can be directly related to water or plumbing. Voltage is comparable to, and can be thought of as, the _____ that pushes water through pipes. Current is the amount of _____ actually flowing through the pipes at any given time.
A. temperature, water
B. pressure, pressure
C. pressure, water

3. [4-2/1/2]
The greater the _____ (voltage) in a line, the greater the amount of _____ (electric current) that flows.
A. water pressure, water
B. back flow, air
C. restriction, molecules

4. [4-2/2/2]
Using the water analogy, the alternator can be thought of as the _____ which provides water pressure to the _____ and the _____.
A. battery, electrical ground, propeller
B. pump, primary bus, avionics bus
C. pump, radio, fuel tank

5. [4-2/2/5]
A spinning alternator causes electric _____ to flow into the primary bus and through the electrical equipment. It then returns to its _____ source in a manner similar to the tray in our water analogy. This tray is called the _____.
A. current, original, electrical ground
B. force, battery, oil pan
C. pressure, alternator, battery

6. [3-3/Figure 5] Label the individual components of the water analogy circuitry:

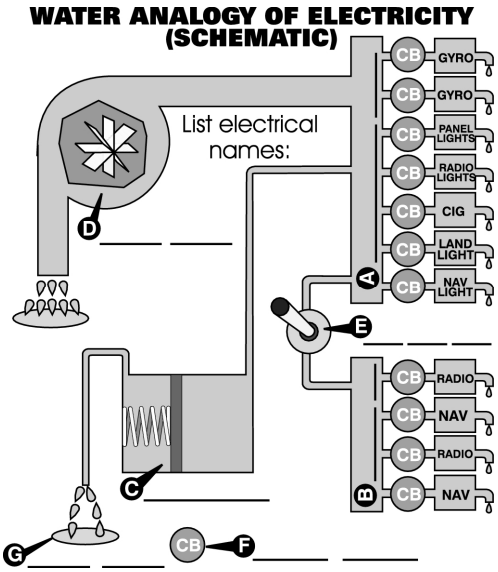

The Electrical Ground

7. [4-3/3/2]
The electrical ground is not the ground upon which you stand. It's usually the airplane's _____.
A. battery
B. metal frame
C. ground wire

Load Meter

8. [4-4/1/2]
A load meter is located between the _____ and the _____ of our water (electrical) system.
A. pump (alternator), starter
B. pump (alternator), battery
C. pump (alternator), primary bus

9. [4-4/1/2]
The load meter shows the _____ placed on the pump (alternator) by the airplane's water (electrical) system.
A. pressure (voltage)
B. water load (current)
C. resistance

10. [4-4/1/3]
A zero reading on the load meter (a full left deflection) means that the water pump (alternator) _____ providing pressure to the primary bus.
A. is
B. isn't
C. Both of the above.

11. [4-4/Figure 7]
Based on the water analogy circuit below, the load meter would be located at _____.
A. position Z
B. position X
C. position Y

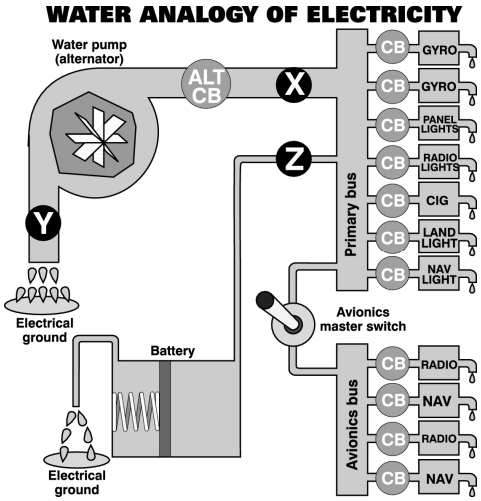

12. [4-4/1/3]
A zero reading on the load meter means the alternator _____ providing electricity to the primary bus or there is ____ electrical current drawn by the airplane's electrical equipment. This can happen when the _____ fails or all the airplane's electrical equipment is turned off.
A. isn't, no, alternator
B. is, little, battery
C. isn't, no, ground wire

13. [4-4/3/1]
Amps are a measure of _____ flow.
A. voltage
B. current
C. water pressure

14. [4-4/3/2]
Circuit breakers protect electrical equipment and wires from receiving more _____ than they can safely handle.
A. current
B. voltage
C. resistance

The Battery

15. [4-5/2/2]
In the actual electrical system, the battery _____ stores the electrical charge provided by the alternator.
A. spring
B. mechanically
C. chemically

16. [4-5/2/2]
It's the _____ which allows you to operate the airplane's electrical equipment when the engine isn't running or when the alternator fails in flight.
A. alternator
B. propeller
C. battery

Battery Potential

17. [4-5/3/2]
A 35 amp hour battery should (in theory) provide _____ amps of continuous current to the electrical system for one hour.
A. 35
B. 17.5
C. 3.5

18. [4-5/3/4]
While airplane batteries are rated at 12 or 24 volts, airplane electrical systems (their alternators) are rated for ____ or ____ volts.
A. 12, 24
B. 14, 28
C. 7, 14

The Charge-Discharge Ammeter

19. [4-6/1/1]
Between the positive terminal of the battery and the primary bus is an ammeter, called a _____ ammeter.
A. charge-discharge
B. battery
C. load

20. [4-6/1/1]
As the name implies, the charge-discharge ammeter tells you if electrical current is flowing into or out of the _____.
A. load meter
B. alternator
C. battery

21. [4-6/1/2]
A positive deflection of the charge-discharge ammeter usually implies that the battery is being _____ .
A. charged
B. discharged
C. neutralized

22. [4-6/1/2]
A negative needle deflection on the charge-discharge ammeter usually implies that the _____ is supplying the primary bus with electrical current.
A. ammeter
B. regulator
C. battery

23. [4-6/Figure 12]
Based on the water analogy circuit to the top right, the charge-discharge ammeter would be located at _____.
A. position Y
B. position X
C. position Z

WATER ANALOGY OF ELECTRICITY

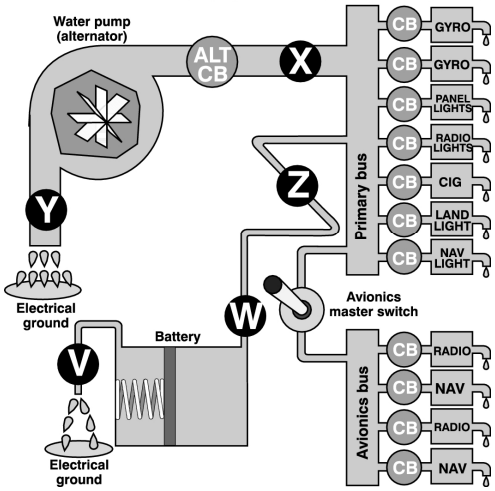

24. [4-6/1/3]
Normally, the needle of the charge-discharge ammeter should be resting near the _____ or _____ mark. This implies that the battery is neither being charged nor discharged (a good sign).
A. zero, center
B. full left, full right
C. 0, 60

25. [4-6/2/2]
After startup, the battery is sure to be slightly drained. You can expect to see a _____ needle deflection of five, maybe six or seven needle widths on the ammeter right after engine start.
A. positive (+)
B. neutral (+/-)
C. negative (-)

26. [4-7/1/2]
Most airplane operation manuals suggest that after approximately _____ of cruising flight, the ammeter needle should return to within a two-needle-width deflection from center on the positive (+) or charging side.
A. 1 minute
B. 10 minutes
C. 30 minutes

27. [4-6/Figure 14 & 4-7/Figure15]
Based on the schematic below, which ammeter (Y or Z) goes with which circuit (W or X)?
A. Y goes with circuit W, Z goes with circuit X.
B. Y goes with circuit X, Z goes with circuit W.
C. Y goes with circuit W, Z goes with circuit W.

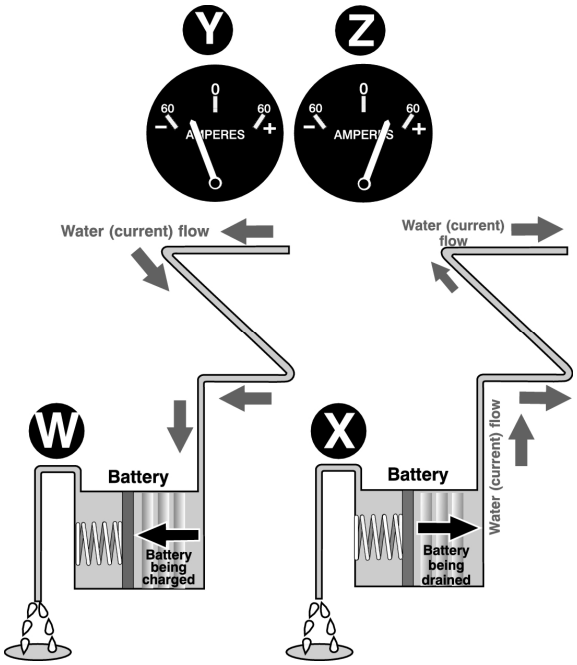

28. [4-7/1/2]
Excess voltage resulting from a battery overcharge can _____ battery fluid (electrolyte), damaging the battery and possibly causing a battery ____.
A. replenish, freeze
B. boil off, fire
C. boil off, charge

29. [4-7/1/3]
A needle deflection on the _____ side means current is flowing out of the battery onto the primary bus
A. 0 or 60
B. positive (+)
C. negative (-)

Load Meters

30. [4-7/3/3]
Load meters provide important indications about the health of the airplane's electrical system. Unlike charge-discharge ammeters, they are calibrated to reflect the actual _____ load placed on the alternator.
A. ampere
B. voltage
C. resistance

31. [4-8/1/1]
Load meters with a zero or full-left deflection indicate the alternator _____ providing current to the primary bus.
A. is
B. isn't
C. should be

32. [4-8/1/1]
During flight with electrical equipment in use, a full left deflection of the load meter needle is similar to a charge-discharge ammeter reading pointing to the _____ side of its scale.
A. negative (-)
B. neutral
C. positive (+)

33. [4-8/1/2]
A load meter needle deflection to the right of the zero index represents the _____ drain on the alternator.
A. electrical voltage
B. electrical current
C. electrical resistance

34. [4-8/1/2]
If you add all the electrical current used by the active electrical equipment, this sum should be equal to the amount of the load meter _____ deflection.
A. needle's
B. voltage
C. negative

35. [4-8/Figure 17]

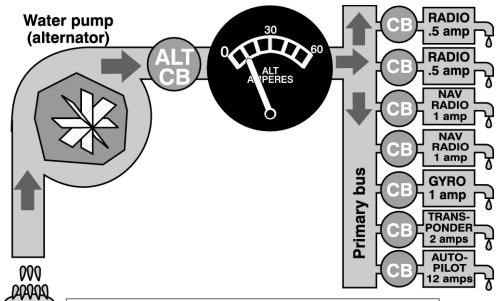

The battery on this electrical system will:
A. overcharge.
B. undercharge.
C. remain unaffected.

36. [4-8/Figure 18]

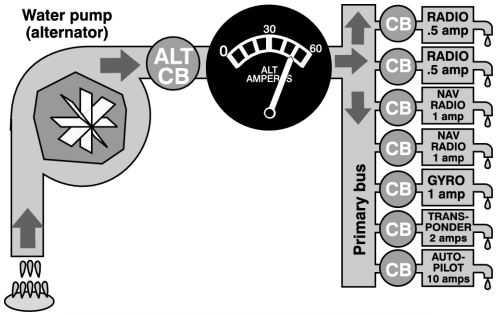

The battery on this electrical system will:
A. overcharge.
B. undercharge.
C. remain unaffected.

Electrical Drain

37. [4-8/1/4]
Radios typically consume _____ amp(s) of current while receiving and about _____ amps(s) while transmitting.
A. one-half, 5
B. 5, one-half
C. 1, 2

38. [4-8/2/2]
With two radios, two nav radios, one electric gyro, a transponder and an autopilot in use, a 16 amp deflection should be shown on the load meter. A needle deflection less than 16 amps implies that the _____ isn't providing enough current to run the equipment.
A. resistor
B. battery
C. alternator

39. [4-8/3/1]
Load meter needle deflections less than the summed amperage of active and properly working electrical equipment imply that the _____ will eventually be _____.
A. alternator, drained
B. battery, drained
C. electrical ground, shorted

40. [4-8/3/2]
Suppose the load meter's needle deflection is greater than the needs of the electrical equipment. This can lead to
A. engine failure.
B. pilot failure.
C. evaporating battery fluid or battery and electrical fires.

The Voltage Regulator

41. [4-9/3/1]
Voltage regulators or alternator control units (they're essentially the same thing) regulate the _____ output.
A. engine's
B. alternator's
C. battery's

42. [4-9/3/1]
Voltage regulators help alternators maintain a _____ voltage output under varying RPM conditions.
A. constant
B. low
C. high

43. [4-10/1/1]
Alternators need a little bit of electricity running through them before they'll start producing electricity. This small amount of electrical prime is called the _____.
A. battery field current
B. primary bus current
C. alternator field current

Problems With Brains

44. [4-11/1/2]
If your airplane has a low-voltage light, it can illuminate
A. during low engine idle.
B. when the alternator has been taken offline.
C. Both of the above.

45. [4-11/1/4]
If your airplane has a high-voltage warning light, it can activate:
A. when the alternator puts out excessive voltage.
B. if the voltage regulator malfunctions.
C. Both of the above.

46. [4-11/1/5]
If you need the equipment that was disabled by a popped circuit breaker, a good recommendation is to never reset the circuit breaker _____.
A. more than two times
B. more than one time
C. at all

47. [4-D11/2/1]
Manually taking the alternator offline becomes an important consideration if _____ condition occurs and the circuitry doesn't _____ isolate the alternator.
A. a battery full, fully
B. an overvoltage, automatically
C. an isolated voltage, reset and

Making Connections

48. [4-D12/1/3]
If the battery is dead, the _____ isn't going to work.
A. magneto
B. engine
C. alternator

49. [4-D12/1/5]
If the voltage regulator goes bad and the alternator produces too much voltage, you can take the alternator offline by pulling the _____ circuit breaker.
A. main alternator
B. battery terminals off the
C. avionics

50. [4-D12/1/5]
Turning off the alternator half of the master switch on many airplanes will shut off the _____ field current flow, thus deactivating the _____.
A. alternator, alternator
B. engine's, battery
C. alternator, engine

51. [4-D13/1/2]
If faced with an errant voltage regulator in flight which forces you to deactivate the alternator, unload the system by turning off _____ equipment.
A. all essential electrical
B. all mechanical
C. all nonessential electrical

52. [4-14/Figure 25 & D15/Figure 27]
Compare the water analogy circuitry with the airplane's electrical circuit below.

52. [D14/Figure 25 & D15/Figure 27]
Compare the water analogy circuitry with the airplane's electrical circuit below.

1. A
2. C
3. A
4. B
5. A
6. A/primary buss, B/avionics bus, C/battery, D/alternator, E/avionics master switch, F/circuit breaker, G/electrical ground
7. B
8. C
9. B
10. B
11. B
12. A
13. B
14. A
15. C
16. C
17. A
18. B
19. A
20. C
21. A
22. C
23. C
24. A
25. A
26. C
27. B
28. B
29. C
30. A
31. B
32. A
33. B
34. A
35. B
36. A
37. A
38. C
39. B
40. C
41. B
42. A
43. C
44. C
45. C
46. B
47. B
48. C
49. A
50. A
51. C